卷册检索号 SEARCH NO. OF THE VOLUME
MLHVDC-LCS-ECI-DD-EC-0509 30-B003701S-D0509

图纸文件目录（首页）

CATALOG OF DRAWING DOCUMENTS (HEAD PAGE)

拉合尔±660kV换流站 工程 施工图 阶段
±660kV Lahore Converter Station PROJECT Detail Design DESIGN STAGE

电气 专业 第 05 卷 第 09 册
Electrical SPECIALITY VOLUME 05 BOOK 09

卷册名称 深井泵房建筑电气
Volume name Deep well Electrical

批 准 APPROVED BY	
审 核 REVIEWED BY	
设计/勘测 DESIGNED BY/ SURVEYED BY	
图 纸 6 张 DRAWING 6 NOS.	打印件 本 PRINTED COPIES NOS.

序号 No.	图 号 DRAWING NO.	文 件 名 称 DOCUMENT TITLE	版本 EDITION	张 NOS.	本 NOS.	备注 REMARKS
1	30-B003701S-D0509-001	电气设计施工说明及图例一 Electrical design construction instructions and legend 1	A	1		
2	30-B003701S-D0509-002	电气设计施工说明及图例二 Electrical design construction instructions and legend 2	A	1		
3	30-B003701S-D0509-003	配电箱系统图、电力干线图及SPD分布图	A	1		
		power distribution system diagram、electric power main line diagram and SPD distribution diagram				
4	30-B003701S-D0509-004	电气平面图 Electrical plan	A	1		
5	30-B003701S-D0509-005	屋顶防雷平面图 接地平面图	A	1		
		Roof lightning protection plan Earthing plan				
6	30-B003701S-D0509-006	材料表 Material list	A	1		

注:

电气设计施工说明及图例一

Electrical design construction instructions and legend 1

一、项目概况:
First: Project overview

项目名称:巴基斯坦默蒂亚里-拉合尔±660kV直流输电工程/拉合尔±660kV换流站
Project name:±660kV HVDC Project from Matiari to Lahore in Pakistan

建设单位:国家电网/中国电力技术装备有限公司
Development organization:State Grid / China Electric Power Equipment And Technology CO .TD

本次出图范围为深井泵房
Design scope: Deep well

单体名称 Name	建筑层数 Building Storey	建筑高度 Height	建筑面积 Area	室内外高差 Altitude intercept
深井泵房 Deep well	1	6m	22.12m ^{2}	0.3m

二、设计依据
Second: Design basis

1、其它专业提供的相关资料
1. Relevant information provided by other majors

2、有关规范:
2. About the specification

三、设计内容
Third :Design content

1、本卷册设计内容包括;低压配电系统;电力、照明系统;防雷接地系统;
1、This volume content including: Low voltage distribution system; Power and lighting system; Lightning protection earthing system;

2、本工程各配电总箱的上级配电及其进线详见其他卷册,本次设计只负责各配电总箱进线电缆后的相关设计。
2、In this project,the superior distribution and incoming line of the total engineering power distribution box is shown in the other volumes, this design only responsible for the power distribution design after the incoming line of total distribution box .

3、400V站用电室配电及逆变器配电设计详见其他卷册.
3、The distribution design of 400V station service house an inverter is shown in the other volume.

四、供配电系统
Fourth :Design content

1、本工程由400V站用电室配电屏引380/220V低压电源经电缆沟敷设至普通照明总箱SJAL.
1、In this project,the 380/220v low voltage power is led to the General lighting total distribution box ZPAL from 400V station service house distribution cabinet by led in the cable trench.

2、本工程设备负荷为三级。
2、The equipment's load level in this project is three-level.

3、配电采用放射式配电方式,由分别由普通照明总箱,普通动力总箱,备用照明总箱出线至各末端设备。
3、Distribution adopts radio-type power distribution,the line are led to equipment from the General lighting total distribution box the General power distribution box and the Standby lightingtotal distribution box.

五、导线选择与敷设
Fifth: Wire selection and installation

1.导线选择
1.Conductor choice

除图中已标注外,普通照明、动力支线选用BV-450/750型2.5平方毫米铜芯线。
Except marked in the drawing,the lighting and power wires are selected the BV-450/750 type that its copper wire is 2.5mm^2.

备用照明、应急及疏散指示照明导线均采用耐火导线N-BV-450/750型2.5平方毫米铜芯线。
both emergency evacuation lighting and Standby lightingwires are used fire-resistant wire N-BV-450/750type that its copper wire is 2.5mm^2.

2.敷设方式
2.The system of laying

所有建筑物内出墙至室外的埋管均应采用镀锌钢管(镀锌钢管敷设壁厚大于2.0mm),如户内配电箱,弱电箱引至户外电缆沟或电缆井的预埋管等
All the buried pipes that is laid out of buildings should be threaded by galvanized welded steel pipe(the pipe's wall thickness is greater than 2.0mm) to project,Such as the buried pipe that is laid from the Power distribution box or weak box indoor to the outdoor Cable hand wel or cable trench

除图中已标注外,普通照明、动力、弱电分支线于墙内或混凝土内暗敷时穿阻燃型PVC管,要求选用中型及以上管材,半硬质(壁厚大于1.5mm),在吊顶、活动地板等明敷场所仍要求采用镀锌钢管或金属槽盒(镀锌钢管敷设壁厚大于1.5mm);
Except marked in the drawing,when the general lighting、power、weak current wires is laid inside the wall or the concrete it can be threaded by flame retardant PVC pipe and it should choose medium and above semi-rigid tubing(the PC pipe's wall thickness is greater than 1.5mm) .
And when it is laid in place such as condole top, activity floor where it should be exposed laying,it should be threaded by galvanized welded steel pipe (the pipe's wall thickness is greater than 1.5mm) to project.

当线路采用PVC导管敷设时,当其当穿过建筑物基础时,应加保护管保护;当穿过建筑物变形缝时,应设补偿装置。刚性塑料导管暗敷或埋地敷设时,引出地(楼)面的管路应采取防止机械损伤的措施。
If the line is threaded by PVC pipe, the protective tube protection shall be added when it passes through the building foundation ;Compensation devices shall be installed when passing through the deformation joints of buildings.When the rigid plastic catheter is concealed or buried under the ground, the piping out of the ground (floor) shall be taken to prevent mechanical damage.

除图中已标注外,备用照明、应急疏散照明线线路均穿镀锌钢管敷设(壁厚大于1.5mm)
Except marked in the drawing the emergency evacuation lighting and Standby lightingwires are threaded by galvanized welded steel pipe(the pipe's wall thickness is greater than 1.5mm) to project.

备用照明、应急疏散照明线路暗敷设时,应采用耐火导线,暗敷在不燃烧体结构内,其保护层厚度不应小于30mm;
When the emergency evacuation lighting and Standby lighting circuit is laid by concealed laying in the construction, it must use the Fire-resistant wire. And the construction must be Non-combustible component,and its protective thickness shall not be less than 30mm;

明敷时,应穿金属管或金属线槽,并应采取防火保护措施。为消防设备供电的线路则采用阻燃耐火导线。
When the fire power circuit and the emergency lighting circuit is laid by exposed laying,it must be laid in galvanized welded steel pipe or metal trunking, and the fire protection measures should be taken.The wires power supply to the fire equipment must use the fire - retardant and fire-resistant wire.
所有布线埋管均需在转弯处设置弯头,转弯半径不小于15倍电线式电缆外径。
All wiring must be setted the elbow, at the corner,and the turning radius is not less than 15 times wire cable diameter

六、节能
sixth: Energy saving

1. 荧光灯灯具的效率
1. The fluorescent lamp lunminaire efficiency

灯具出光口形式 the light outlet from of the lunminaire	开敞式 open type	保护罩(玻璃或塑料) protection cover (glass or Hard plastic)		格栅 grille
		透明 Transparent	磨砂、棱镜 frosted、prism	
灯具效率 lunminaire efficiency	75%	70%	55%	65%

2.本工程采用节能吸顶灯及荧光灯,照明光源的显色指数(Ra)不小于80。所有荧光灯镇流器要求采用节能型电子式,单灯功率因数不小于0.9,采用的镇流器应满足国家能耗标准。
2. This project use the Energy - saving ceiling lamps and fluorescent lamps,the colour rendering index(Ra) of the lighting source should be not less than 80.All the fluorescent lamps must use the energy-saving electronic ballast,the single-lamp power factor is not less than 0.9,and the ballast used should meet the national energy standards.

七、设备安装
seventh: equipment installation

1.潮湿场所内灯具采用防水防尘型。
1. The lamp in the damp places uses Waterproof and dustproof type

疏散标志灯嵌墙安装,下沿距地0.5米,安全出口标志灯嵌墙安装,门框上0.1米。其余灯具见平面标注或图例说明。
The escape sign lamp should be embedded wall installation, its lower edge is apart from the ground 0.5 meters
The exit sign lamp should be embedded wall installation, and it is apart from the top of the door 0.1 meters
The Installation of other lamps is shown in the graphic annotation or illustration instructions.

2.照明、动力配电箱(柜)安装方式及高度参见系统图。
2. The installation mode and height of the lighting or power distribution box (cabinet) is shown in the system diagram.

3.照明开关嵌墙暗装,排风机启停按钮明装,距地1.3米,面板边沿离门框内边距离为0.15米。
3. The lighting switch is concealed installed in the wall, the Rev. Stop button of exhaust fan is open installed, and it is apart from the ground 1.3 meters, the edge of the pane it is apart from the inside edge of the door 0.15m.
插座均嵌墙暗装,距地0.3米。电源插座与信息插座保持0.3米间距。
The sockets are all concealed installed in the wall,and they are apart from the ground 0.3m.The power socket and the information socket are spaced at 0.3m

4.公共部位的配电设备及弱电设备均嵌墙安装,下沿距地1.5m;各电话、信息、电视插座均暗装,采用安全型插座。
4. The power distribution equipment and the weak current equipment in the public place should be concealed installed in the wall,and its lower edge is apart from the ground 1.5 meters; The telephone、information and TV sockets are concealed installed in the wal,and they should be use safety socket.

八 防雷接地设计说明.
eighth: Design description of lightning protection and eatthing.

1.屋面采用热镀锌圆钢Ø12明敷作为接闪带,组成不大于20mX20m或24mX16m接闪网格。所有高出屋面的各种金属构件均须与接闪带焊接连通。
1. Using hot dip galvanized round steel (ø12) as the exposed laying air-termination system on the roof, and making up the air-termination system grid on the roof which size is not bigger than 20m*20m or (24m*16m). All metal components above the roof must be welded to the air-termination system.
采用热镀锌扁钢(50*6)作为防雷引下线,沿墙柱暗敷,引至接地干线。引下线沿建筑四周均匀布置,间距不应大于20m。
Using the hot galvanizing flat steel(50*6) as lighting protection down-conductor system ,and it is led to the earth-termination system by being laid in the wall or column、The down-conductor system should be set spread evenly around the building,and its spacing should not be greater than 20m.
本工程采用环房暗敷接地线为主接地网,接地电阻应小于1欧姆,具体设计详见其他卷册。
This project's main earth-termination system is buried underground around the building,the earthing resistance should be less than 1 ohm, and The detailed designs is shown in the other volume.

2.强电电源进线及弱电电源进线处等电位具体做法详见图集08D800-8《民用建筑电气设计与施工》-P123
2.Equipotential practices and requirements of place where the power supply line and weak current power supply line enter to the building refer to the atlas 08D800-8《Electrical design and construction of civil buildings-lightning protection and earthing》-P123
所有进出建筑物的金属管道(包括垂直管道)、建筑物内的水管、采暖和空调管道等各种金属干管、建筑物金属结构部分等应作等电位联接。
具体做法参照图集《等电位联结安装》15D502和图集08D800-8《民用建筑电气设计与施工》
All metal pipes in and out of buildings (including vertical pipes)、various metal pipes, such as water pipe, heating and air conditioning pipe and metal structure part of the building Should be done equal potential connection,The specific practice refer to the atlas 《Equal potential connection installation》15D502 and atlas 08D800-8
《Electrical design and construction of civil buildings-lightning protection and earthing》

3.为过防止电压对电气设备造成的损害,在各级低压电源进线处将设置防过压的电涌保护器。在室外进户的通信电缆以及同轴电缆上设置信号浪涌保护器。
3. To prevent the damage for electrical equipment caused by voltage, the Surge protection Device should be set where all levels of low voltage power supply enter the building.The communication cable and coaxial-cable should be set with signal Surge protection Devic.

Reference Drawings

Drwg. No.	Title

Revisions

	Name	Date	Notes

巴基斯坦默蒂亚里-拉合尔±660kV直流输电工程
±660kV HVDC Project from Matiari to Lahore in Pakistan

NATIONAL TRANSMISSION & DESPATCH COMPANY (NTDC) LIMITED PAKISTAN

CONTRACTOR 国家电网 STATE GRID 中国电力技术装备有限公司 CHINA ELECTRIC POWER EQUIPMENT AND TECHNOLOGY CO.,LTD.

SUBCONTRACTOR East China Electric Power Design Institute Co.,Ltd.

拉合尔±660kV换流站
±660kV Lahore Converter Station

设计阶段 PHASE: 施工图 Detail Design

M L H V D C - L C S - E C I - D D - E C - 0 5 0 9 - 0 0 1 A

	姓名	日期
设计 Designed	李竹	2018.2.8
校核 Checked	梁竹军	2018.2.8
审核 Reviewed	张志方 郑煜	2018.2.8
批准 Approved	张志方 李建辉	2018.2.8

电气设计施工说明及图例一
Electrical design construction instructions and legend 1

比例 Scale: 1:100
图号 DWG NO.: 30-B003701S-D0509-001
版本 REV.: A

594X841

电气设计施工说明及图例二

Electrical design construction instructions and legend 2

4. 其余要求详见接地平面图及屋顶防雷平面图。

4. The other requirements are shown in the earthing plan and Roof lightning protection plan.

5. 施工及验收请参照国标图集15D501、15D502、15D503、14D504、08D800-8相关页次。

5. Construction and acceptance, please refering to the standard atlas 15D501、15D502、15D503、14D504、08D800-8.

6. 接地装置施工过程中，电气安装单位应与机电安装单位在现场密切配合，所有隐蔽工程均需现场验收，桩位具体尺寸详见结施图。

6. During the construction of earth-termination system,the electrical installation unit shall cooperate closely with the civil construction units in the field. All concealed works shall be subject to on-site acceptance,The detailed dimensions of pile position are shown in the pape structural drawings.

八、建筑机电工程抗震措施：

eighth.Building mechanical and electrical engineering anti-seismic measures:

1. 当采用硬母线敷设且直线段长度大于80m时，应每50m设置伸缩节；在电缆桥架、电缆槽盒内敷设的缆线在引进、引出和转弯处，应在长度上留有余量；接地线应采取防止地震时被切断的措施。

1.When the hard bus line is used and the length of the line segment is greater than 80m,The telescopic section should be set every 50m. It should be left with a residual amount in the length when the cable lines are introduced in , introduced out and turned around in cable bridge and cable tray. The grounding line shall take measures to prevent the earthquake from being cut off.

2. 缆线穿管敷设时宜采用弹性和延性较好的管材。

2.The cable tube shall be well equipped with good flexibility and ductility.

3. 引入建筑物的电气管路敷设时应符合下列规定：a）在进口处应采用绕性线管或采取其他抗震措施；b）当进户井贴邻建筑物设置时，缆线应在井中留有余量；c）进户套管与引入管之间的间隙应采用柔性防腐、防水材料密封。

3.The installation of electrical pipes being led to the buildings shall meet the following requirements: a) the winding tube should be used in the import department or adopt other seismic measures;b) the cable shall have a residual amount in the well when it is installed in the adjacent building;c) the gap between the inlet casing and the pipe should be sealed with flexible anticorrosion and waterproof material.

4. 电气管路不宜穿越抗震缝，当必须穿越时应符合下列规定：a）采用金属导管、刚性塑料导管敷设时宜靠近建筑物下部穿越，且在抗震缝两侧应各设置一个柔性管接头；b）电缆梯架、电缆槽盒、母线槽在抗震缝两侧应设置伸缩节；c）抗震缝的两端应设置抗震支撑节点并与结构可靠连接。

4.The electric pipe shall not be used to cross the aseismic joint, and shall meet the following requirements when crossing: a）when use metal ducts and rigid plastic catheters it should be close to the lower part of the building and a flexible pipe joint shall be installed on both sides of the aseismatic joint. b）cable ladder, cable tray and busbar shall set expansion joints on both sides of the aseismatic joint. c）anti-seismic support nodes should be set at both ends of earthquake joints and reliable connections with the structure.

5. 电气管路敷设时应符合下列规定：a）当线路采用金属导管、刚性塑料导管、电缆梯架或电缆槽盒敷设时，应使用刚性托架或支架固定，不宜使用吊架，当必须使用吊架时，应安装横向防晃吊架；b）当金属导管、刚性塑料导管、电缆梯架或电缆槽盒穿越防火分区时，其缝隙应采用柔性防火封堵材料封堵，并应在贯穿部位附近设置抗震支撑；c）金属导管、刚性塑料导管的直线段部分每隔30m应设置伸缩节。

5.Electrical piping shall be laid in accordance with the following provisions: a) when the wires are used ducts, rigid plastic conduits, cable ladders or cable tray boxes to led it should use rigid bracket or bracket to fix, unfavorable use condole frame, when it must use condole, should install transverse anti-sway condole frame; b) when metal ducts, rigid plastic pipe, cable ladder or cable tray through the fire zone, the gap should adopt flexible fireproof plugging material block, and should be set near the throughout the site aseismatic support; c) the straight-line segment of the metallic conduit and rigid plastic catheter should be set with a telescopic section every 30m.

九、其它

ninth: others

1. 各用电设备出线口位置请配合水施、风施有关专业图纸进行施工定位。

1. The position of the outlet of each electrical equipment shall be confirmed by cooperating with the related professional drawings like water profession and hvac profession.

2. 线路长度过长时应遵照相关施工规范增加过路接线盒。

2. If the length of the circuit is too long, the connection box should be added by complying with related construction specifications

3. 配电间内安装完毕后，楼板缝隙处需做防火封堵。

3. When the distribution room is constructed finish,the floor cracks should be fireproof sealing.

4. 其它未提之处均参照地方相关施工安装法规。

4. Other unmentioned places shall refer to local construction and installation regulations

5. 本卷册设计以中文部分为主，英文部分仅作参考。

5. This volume is mainly designed in Chinese, and the English part is for reference only

6. 本单体火灾报警系统，工业电视监控系统、呼叫系统的管线预埋及开列，详见各系统卷册。

6. Pipeline embedded and pipeline's material list of Weak current system、Industrial television monitoring system、fire alarm system and call system in this building should be shown in volume of each system .

7. 配电箱、配电盒、照明灯具、插座、开关面板均应按招标文件要求采用质量可靠，性能稳定的产品，符合巴基斯坦当地的使用习惯，且全站要统一品牌，由总包，监理统一批准。需注意，空调、热水器、洗衣机等用电器的插座需与对应电器匹配

7. Distribution box, power distribution box, lighting, socket, switch panel shall be in accordance with the tender documents require it should use the product which is reliable quality, stable performance and it is in accordance with local practices in Pakistan, And the whole station should unify the brand, and it should be unified approvalled by the total package and the supervision . The electrical socket of air conditioning, water heater and washing machine should be matched with the corresponding electrical appliances

敷设方式 system of laying		穿管型号 the pipe type	
CC	沿顶板暗敷 hidden laying in the apical plate	RC	镀锌钢管 galvanized welded steel pipe
WC	沿墙暗敷 hidden laying in the wall	PC	阻燃型塑料导管 Flame retardant plastic catheters
FC	沿地面暗敷 hidden laying in the floor		
MR	沿金属线槽敷设 laying in the metal trunking		

燃烧特性 Combustion characteristic		电线电缆规格 Wire and cable specifications	
ZRB-	B级阻燃 the class B Flame retardant	BV-	聚氯乙烯绝缘电线 polyvinil chloride insulated wire
N-	耐火 fire-resistant		

图例 legend	设备名称 Equipment name	型号及规格 Model and specification	安装方式 Installation
	照明配电箱 lighting distribution box		详见系统图 See the system diagram
	照明配电箱 lighting distribution box		详见系统图 See the system diagram
	动力配电箱 Power distribution box		详见系统图 See the system diagram
	出口指示灯（防水型） exit sign lighting （waterproof type）	光源LED 3W（自带蓄电池） light source: LED 3w（Built-in battery）	门洞上方0.1m（应急时间不小于120分钟） From the top of the door 0.1 m The emergency time is not less than 120 minutes
	单管荧光灯 single tube fluorescent lamp	32W 配电子镇流器 Electronic ballast	吊杆式安装，距地2.8m Derrick installation and it is from the ground 2.8 m
	块板灯 防水 Boards lamp waterproofing	70W 光源采用金卤灯 70W,The light source uses the metal halide lamp.	吊杆式安装，距地5m Derrick installation and it is from the ground 5 m
	吸顶灯（防水型） Suction lamp （waterproof type）	1*18W	吸顶 Suction
S	S表示防水 S means waterproofing		
E	表示备用照明，自带蓄电池 mean Standby lighting Built-in battery	一般应急时间≥120min emergency time≥120 min	
F	风机接线盒 Fan terminal box	380V 10A	暗装，下口距地 4.2m concealed installation, its lower edge isapart from the ground 4 .2 m
	二、三极单相防溅组合插座（安全型） The diode triode single phase anti-splash combinated socket （safety type）	250V,10A	暗装，下口距地 1.5m concealed installation, its lower edge isapart from the ground 1.5 m
	插座（三相四极防溅安全型） socket （Three-phase quadrupole anti-splash safety type）	380V,16A	暗装，下口距地 0.3m concealed installation, its lower edge isapart from the ground 0.3 m
	应急灯（防水型） emergency lamp（waterproof type）	2*23W（自带蓄电池） 2*23W（Built-in battery）	距地2.5m（应急时间不小于120分钟） its lower edge isapart from the ground 2.5 m The emergency time is not less than 120 minutes
	单联单控开关（IP54安全型） single connection planet single control switch（IP54 safety type）	250V,10A	暗装，下口距地 1.3m concealed installation, its lower edge isapart from the ground 1.3 m
	双联单控开关（IP54安全型） two connection planet single control switch（IP54 safety type）	250V,10A	暗装，下口距地 1.3m concealed installation, its lower edge isapart from the ground 1.3 m
LEB	LEB端子板 Local Equipotential Bonding		下口距地0.3m its lower edge isapart from the ground 0.3 m
	接地端子盒 earth terminal box		下口距地0.3m its lower edge isapart from the ground 0.3 m
	排气扇 Exhaust fan		详见暖通图纸 See the hvac drawing

注：

note：

1、本建筑物空调插座采用国标，公共区域插座国标和巴方标准每房间各安装一半原则实施，最终实施方案以业主及监理要求为准。

1、In this building,the air conditioning socket adopts Chinese standard; the electrical sockets in the public areas and each room according to the implementation principle that one half adopt Chinese standard and anothet half adopt Pakistani standard ,and the final implementation plan should be subject to the requirements of the owner and the supervisor.

Reference Drawings

Drwg. No.	Title

Revisions

	Name	Date	Notes

巴基斯坦默蒂亚里—拉合尔±660kV直流输电工程

±660kV HVDC Project from Matiari to Lahore in Pakistan

NATIONAL TRANSMISSION & DESPATCH COMPANY (NTDC.) LIMITED PAKISTAN

CONTRACTOR 国家电网 STATE GRID 中国电力技术装备有限公司 CHINA ELECTRIC POWER TECHNICAL EQUIPMENT CO.,LTD.

SUBCONTRACTOR East China Electric Power Design Institute Co.,Ltd.

拉合尔±660kV换流站

±660kV Lahore Converter Station

设计阶段 PHASE：施工图 Detail Design

M L H V D C - L C S - E C I - D D - E C - 0 5 0 9 - 0 0 2 A

	姓名	日期
设计 Designed		2018.2.8
校核 Checked		2018.2.8
审核 Reviewed		2018.2.8
批准 Approved		2018.2.8

电气设计施工说明及图例二

Electrical design construction instructions and legend 2

比例 Scale 1:100 图号 DWG NO. 30-B003701S-D0509-002 版本 REV. A

594X841

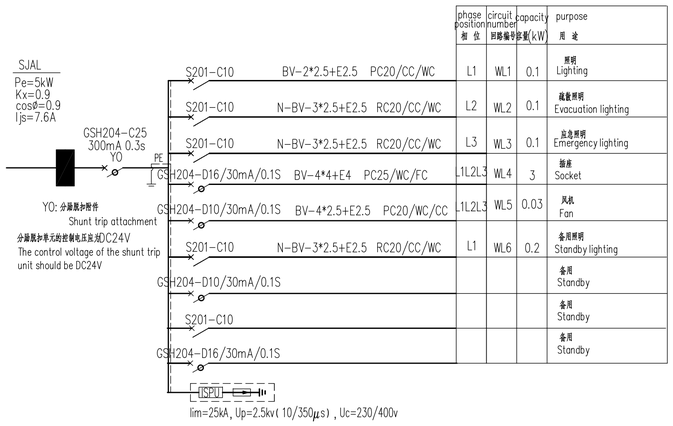

phase position 相 位	circuit number 回路编号	capacity 容量(kW)	purpose 用 途
L1	WL1	0.1	照明 Lighting
L2	WL2	0.1	疏散照明 Evacuation lighting
L3	WL3	0.1	应急照明 Emergency lighting
L1L2L3	WL4	3	插座 Socket
L1L2L3	WL5	0.03	风机 Fan
L1	WL6	0.2	备用照明 Standby lighting
			备用 Standby
			备用 Standby
			备用 Standby

SJAL 配电系统(power distribution system)

挂墙安装,下皮距地1.5m(Installed on the wall, lower edge isapart from the ground 1.5m)

高*宽*深(Height * width * depth):400*600*100

箱体防护等级:IP55

Protection class of the box:IP55

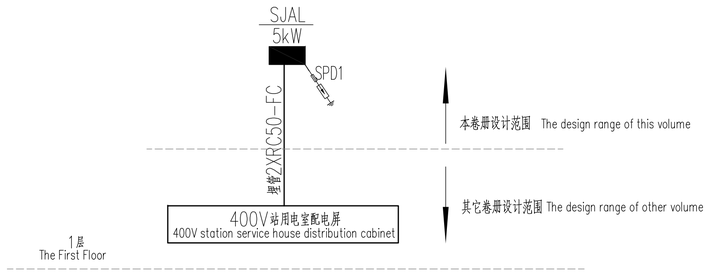

电力干线图及SPD分布图

(Electric power main line diagram and SPD distribution diagram)

注:

note:

1.进线电缆规格由上级配电设计确定

1.Specification of incoming cable is determined by superior distribution design

2.所有配电箱应预留加装接触器的位置。

2.All distribution boxes shall be reserved for loading contacts.

The earthing system: 接地制式 TN-S

Back-up protection device of the front-end of the surge protector: fuse 电涌保护器前端电源后备保护装置、熔断器

parameter 参数 / SPD level SPD级别	waveform 波形	In/Iimp	Up	Uc	Wire specifications 引线规格 phase line side 相线端	Wire specifications 引线规格 earthing line side 接地端	Installation position 安装位置	Back-up protection fuse 后备保护熔断器	wiring mode 接线方式	The numerical of impact resistance voltage rating 耐冲击电压额定值 Uw
SPD1	10/350	Iimp=25kA	2.5kV	230/400v	16(mm²)	25(mm²)	where the power wire enter and out 电源进、出线处	100A	The phase line and neutral line protection mode 相线、中性线对地保护模式	6kV
	8/20	In=80kA	2.5kV	230/400v	16(mm²)	25(mm²)	The equipment distribution tank 屏柜设备配电柜	80A	The phase line and neutral line protection mode 相线、中性线对地保护模式	4kV
SPD2	8/20	In=40kA	1.8kV~2.0KV	230/400v	10(mm²)	16(mm²)	the floor distribution tank 楼层配电柜	50A	The phase line and neutral line protection mode 相线、中性线对地保护模式	4kV

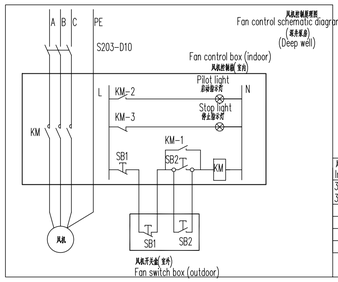

风机控制箱内部材料清单

Internal material list of fan control box

380V接触器(10A) 380V contactor (10A)	1
启动按钮 Start button	2
停止按钮 Stop button	2
红色指示灯 Red indicator	1
绿色指示灯 Green indicator	1
端子排(12对) Terminal row (12 pairs)	1

注:

note:

各个配电箱体内应单独设置PE排,并应接地。

PE platoon should be set separately in the each power distribution box, and it should be lead to the earthing

Reference Drawings

Drwg. No.	Title

Revisions

	Name	Date	Notes

巴基斯坦默蒂亚里—拉合尔±660kV直流输电工程

±660kV HVDC Project from Matiari to Lahore in Pakistan

NATIONAL TRANSMISSION & DESPATCH COMPANY (NTDC) LIMITED PAKISTAN

CONTRACTOR 国家电网 STATE GRID 中国电力技术装备有限公司 CHINA ELECTRIC EQUIPMENT GROUP CO.,LTD.

SUBCONTRACTOR East China Electric Power Design Institute Co.,Ltd.

拉合尔±660kV换流站

±660kV Lahore Converter Station

设计阶段 PHASE: 施工图 Detail Design

M L H V D C - L C S - E C I - D D - E C - 0 5 0 9 - 0 0 3 A

	姓名	日期
设计 Designed		2018.2.8
校核 Checked		2018.2.8
审核 Reviewed		2018.2.8
批准 Approved		2018.2.8

配电箱系统图、电力干线图及SPD分布图

power distribution system diagram, electric power main line diagram and SPD distribution diagram

比例 Scale: 1:100

图号 DWG NO.: 30-B003701S-D0509-003

版本 REV.: A

594X841

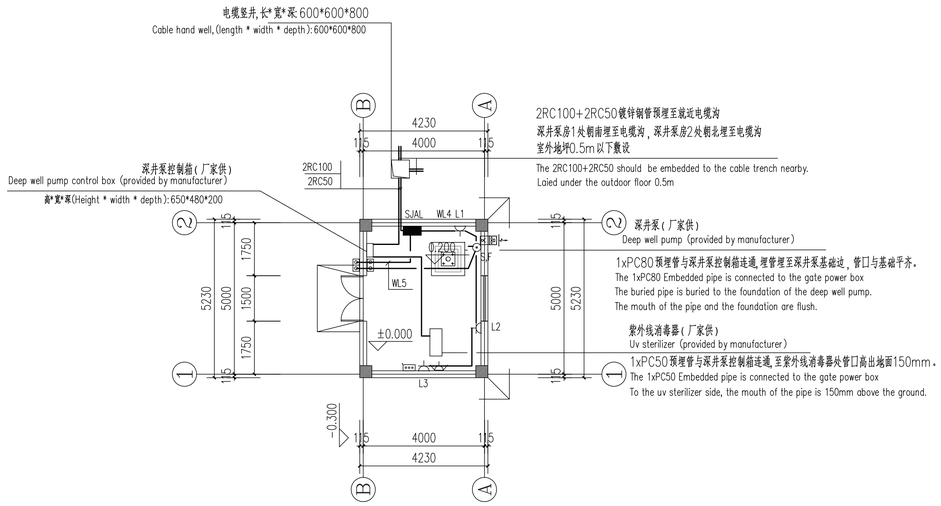

深井泵房1(2)电力平面图 1:100

The first(second) deep well pump house Electric power plan

注：深井泵房1(2)分别位于本换流站西侧和东侧。

Note: The first and second deep well pump house is located at the west and east side of this converter station respectively.

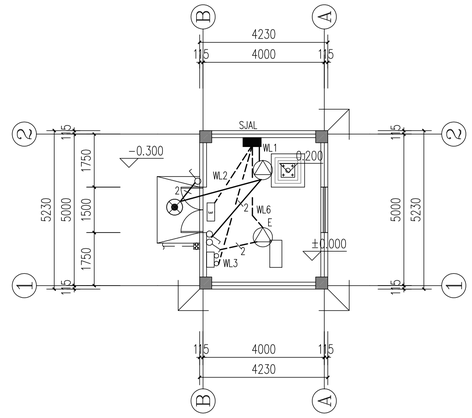

深井泵房1(2)照明平面图 1:100

The first(second) deep well pump house Lighting plan

注：深井泵房1(2)分别位于本换流站西侧和东侧。

Note: The first and second deep well pump house is located at the west and east side of this converter station respectively.

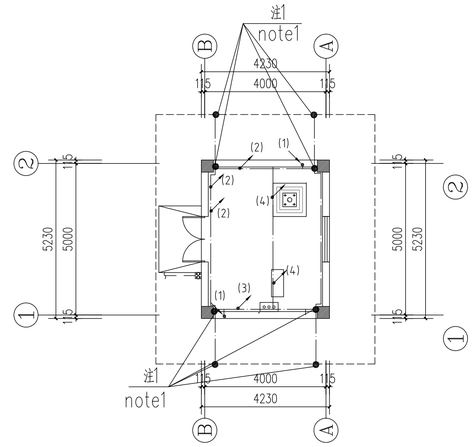

深井泵房1(2)接地平面图 1:100

The first(second) deep well pump house earthing plan

注：深井泵房1(2)分别位于本换流站西侧和东侧。

Note: The first and second deep well pump house is located at the west and east side of this converter station respectively.

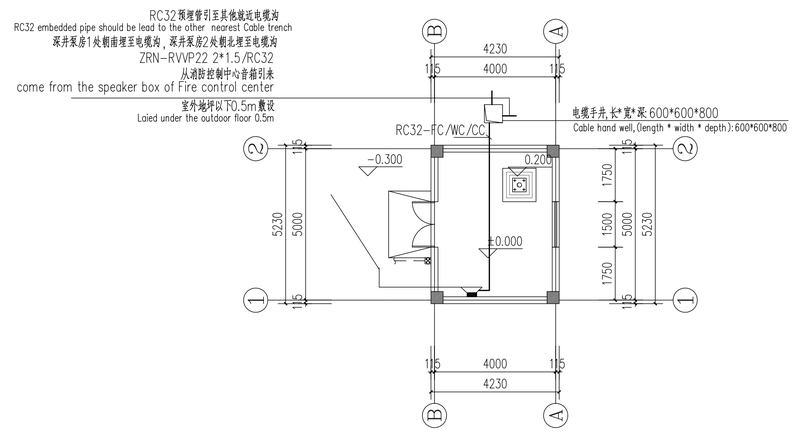

深井泵房1(2)呼叫平面图 1:100

Call plan of the first(second) Deep well

注：深井泵房1(2)分别位于本换流站西侧和东侧。

Note: The first and second deep well pump house is located at the west and east side of this converter station respectively.

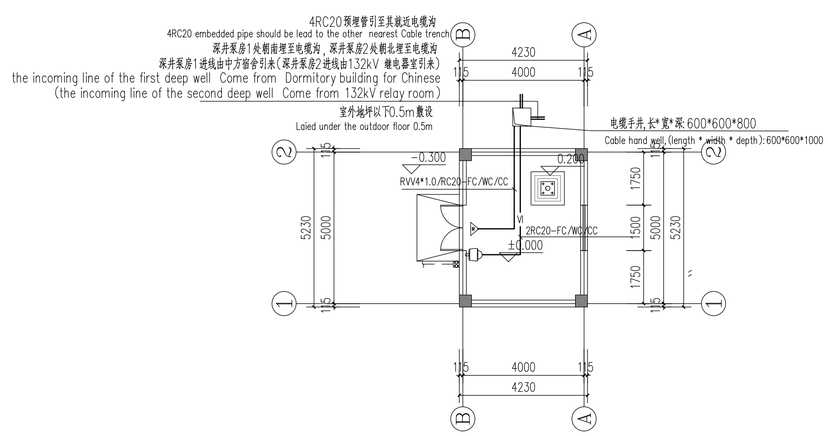

深井泵房1(2)工业视频监控平面图 1:100

Industrial television monitoring plan of the first(second) deep well

注：深井泵房1(2)分别位于本换流站西侧和东侧。

Note: The first and second deep well pump house is located at the west and east side of this converter station respectively.

VI	The monitor line 监视器线路	employ 2RC20-WC/CC 采用 2RC20-WC/CC

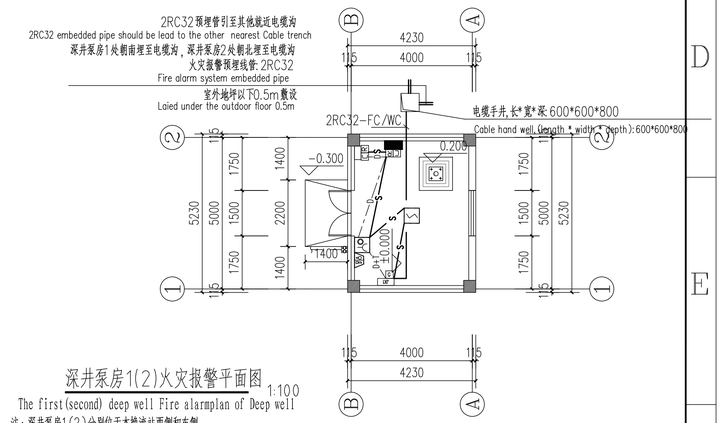

深井泵房1(2)火灾报警平面图 1:100

The first(second) deep well Fire alarmplan of Deep well

注：深井泵房1(2)分别位于本换流站西侧和东侧。

Note: The first and second deep well pump house is located at the west and east side of this converter station respectively.

注:

1、深井泵房建筑电气卷册30-B003701S-D0509中深井泵房1,2的电力平面图、照明平面图、接地平面图均以本次出图为准。
2、呼叫系统及主要材料清册II30-B003701S-D0538中深井泵房1,2的呼叫平面图以本次出图为准。
3、工业电视监控系统及主要材料清册II30-B003701S-D0535中深井泵房1,2的工业视频监控平面图以本次出图为准。
4、火灾报警系统及主要材料清册III30-B003701S-D0533中深井泵房1,2的火灾报警平面图以本次出图为准。

Reference Drawings

Drwg. No.	Title

Revisions

Name	Date	Notes

巴基斯坦默蒂亚里—拉合尔±660kV直流输电工程
±660kV HVDC Project from Matiari to Lahore in Pakistan

NATIONAL TRANSMISSION & DESPATCH COMPANY (NTDC.) LIMITED PAKISTAN

CONTRACTOR 国家电网 STATE GRID 中国电力技术装备有限公司 CHINA ELECTRIC POWER TECHNOLOGY AND EQUIPMENT CO.,LTD.

SUBCONTRACTOR East China Electric Power Design Institute Co.,Ltd.

拉合尔±660kV换流站
±660kV Lahore Converter Station

设计阶段 PHASE: 施工图 Detail Design

M L H V D C - L C S - E C I - D D - E C - 0 5 0 9 - 0 0 4 A

	姓名	日期
设计 Designed		
校核 Checked		
审核 Reviewed		
批准 Approved		
比例 Scale		图号 DWG NO.

版本 REV. A

594X841

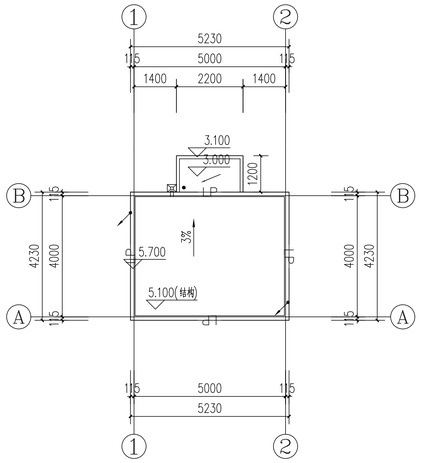

屋顶防雷平面图 1:100

Roof lightning protection plan

注：本换流站东西两侧深井泵房防雷平面图都参考此图。

Note: The roof lightning protection plan of the deep well on both west and east sides of this converter station is referenced in this drawing.

1、在屋顶女儿墙上装设接闪带，并在屋面上装设不大于20m*20m (24m*16m)接闪网格.

2、本设计利用热镀锌圆钢Ø12作明敷接闪带，接闪带沿女儿墙外侧、屋脊、屋檐敷设。支持卡子间距为0.5米，转角处悬空段不大于 0.3米，接闪带高出屋面 0.2米，防雷带固定件采用Ø8热镀锌圆钢，L≈200mm。屋顶其它金属物、构筑物均须与接闪带连接且不得少于二处，不同材质的连接要有防电化腐蚀措施。

3、采用热镀锌扁钢（50*6）作为防雷引下线，沿墙柱暗敷，引至接地干线。每根引下线的冲击接地电阻应小于10欧姆，引至混凝土外的引下线采用热镀锌扁钢，焊接后应除去焊渣并在焊接处涂2道环氧富锌漆。并于引下线所在柱上端预埋一块100x100x8钢板，用于引下线与接闪带连接的转换点，引下线设置断接测试卡盒。

4、竖直敷设的金属管道及金属物顶端及底端均须与防雷装置连接。建筑物外墙面金属构件须与就近的防雷引下线连通，联结线采用热镀锌扁钢25*4沿墙暗敷。

5、利用金属栏杆作接闪带，其壁厚不小于2.5mm。

6、用护栏、警告牌使进入距引下线3m范围内地面的可能性减小到最低限度。

7、—— LP —— 热镀锌圆钢Ø12作明敷接闪带

Description:

1、Setting the air-termination system on the parapet wall of roof. And setting the air-termination system grid on the roof which size is not bigger than 20m*20m or(24m*16m).

2、This design use hot dip galvanized round steel (ø12) as the exposed laying air-termination system.The air-termination system is laid along the outside of the parapet , the ridge and the eave.The support card spacing for 0.5m.The suspension section of the corner should be not longer than 0.3 meters.The air-termination system shall be 0.15m higher than the roof,and the lightning protection belt fixed part adopts 8 galvanized round steel,L≈200mm.The other metal structures of the roof shall be connected to the air-termination system , and the connection shall be not less than two.The connection of different materials should have anti - corrosion measures.

3、Using the hot galvanizing flat steel（50*6）as lighting protection down-conductor system , and it is led to the earth-termination system by being laid in the wall or column. The impact grounding resistance of every down-conductor system should be less than 10 ohms,the galvanized flat steel lead to the outside of concrete, should remove the slag and apply 2 epoxy zinc rich paint to the welding place after being welded.And embeding a steel plate which size is 100x100x8 in the column,that used to be the transfer point of the connection between the down-conductor system and the air-termination system.The down-conductor system should set the breaking test box.

4、The top and the end of the metal pipes and metal object which is laided verticall yshall be connected to the lightning protection system.The metal components on the building external wall shall be connected to the nearest lighting protection down-conductor system. The connection line adopts hot-dip galvanized flat steel (25 * 4) ,and be concealed laied alone wall.

5、Using metal balusters as air-termination system,and its wall thickness is not less than 2.5 mm.

6、Using guard bar and warning board , which can reduce the possibility that entering the groud where distance from the down-conductor system of 3m to a minumum.

7、—— LP —— the hot dip galvanized round steel (ø12) that is uesd as the exposed laying air-termination system

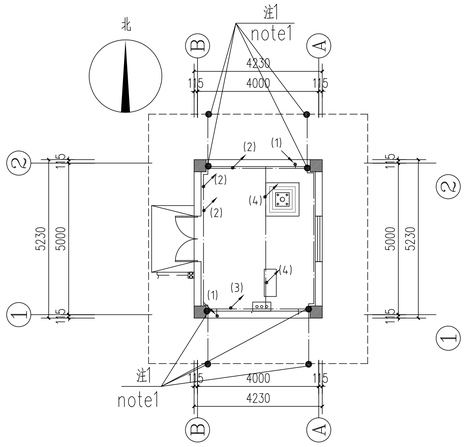

深井泵房1 接地平面图 1:100

The first deep well earthing plan

注：此深井泵房位于本换流站东侧。

Note: this deep well is located at the east side of this converter station.

图例:

------- 表示环房暗敷接地线，距建筑物1~1.5m，埋深为地下0.8m，并设垂直接地体(L=3m)，具体设计详见其他卷册。

—— —— 表示热镀锌扁钢50*6，用作室内暗敷接地线，沿墙暗敷，距地0.2；非沿墙部分可埋在楼板或基础内，但需与室内环墙暗敷的接地线连通。

防雷接地引下线 50x6热镀锌扁钢沿墙或柱子暗敷，与主接地网焊接，并与每层的户内环房接地干线可靠连接。

设备、等电位接地引上线

接地端子盒，距地0.3m，接地端子做法参见92DQ13防雷与接地装置图集

1、标号"(1)"：为防雷接地引下线

2、标号"(2)"：配电箱采用热镀锌扁钢25*4沿墙或柱子暗敷，与户内接地干线连接。

3、标号"(3)"：弱电箱采用热镀锌扁钢25*4沿墙或柱子暗敷，与户内接地干线连接。

4、标号"(4)"：从户内接地干线引接至深井泵、紫外线消毒器等设备旁，采用-50x6热镀锌扁钢，露出地坪500mm.由于设备尚未招标，存在调整可能，现场可根据实际情况调整。

5、接地线穿过墙壁、楼板和地坪处需加装UPVC保护管，两端做好防水处理。

6、空调外机及室内各种金属构件（如金属门、窗，楼梯扶手，钢板，金属槽盒及爬梯等）均应采用-25x4热镀锌扁钢就近与室内接地干线或主接地网焊接。

7、金属门/窗扇与门/窗框之间应采用铜编织线连接。

8、若钢绞线和镀锌扁钢的连接点在土壤中，需在连接点2m范围内，在钢绞线和镀锌扁钢上包裹沥青，以免发生腐蚀。

注1：室内接地干线利用50x6镀锌扁钢与环房暗敷接地线焊接

note1: the place where the indoor earth-termination system is welded with the earth-termination system around the building by using the hot-dip galvanized flat steel 50*6

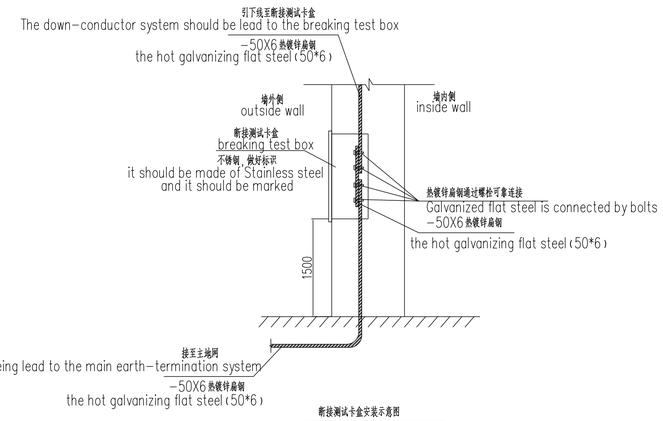

断接测试卡盒安装示意图

The breaking test box installation diagram

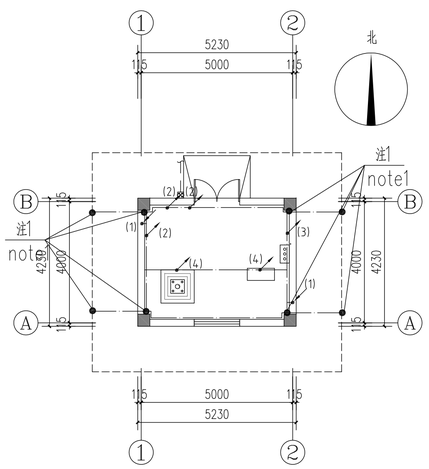

深井泵房2 接地平面图 1:100

The second deep well earthing plan

注：此深井泵房位于本换流站西侧。

Note: this deep well is located at the west side of this converter station.

legend:

------- The earth-termination system buried at 0.8m underground around the building and it's 1 ~ 1.5m from the building, and setting the vertical earth electrode(L=3m). The detailed designs is shown in the other volume.

—— —— using the hot-dip galvanized flat steel 6*50 that is laid in the wall and its lower edge isapart from the ground 0.2 m (The non-wall part can be buried in the floor or foundation, but it needs to connect with the earthing line of the interior ring wall)as the indoor earth-termination system.

Lightning protection down-conductor using the hot galvanizing flat steel 50*6 that is laid in the wall or column ,and it should be connected with the main earth-termination system and the indoor earth-termination system on each floor.

Electrical equipment, equipotential earthing up wire

earth terminal box,its lower edge isapart from the ground 0.3 m The Main Equipotential Bonding method is shown in 92DQ13 lightning protection and grounding device atlas

1、The label "(1)":Lightning protection down-conductor system

2、The label "(2)": The distribution box should be led to be welded with the indoor earth-termination,by using the hot galvanized flat steel 25*4 that is laied in the column or wall.

3、The label "(3)": The weak current box setting should be led to be welded with the indoor earth-termination system by using the hot galvanized flat steel 25*4 that is laied in the column or wall.

4、The label "(4)": The -50x6 hot galvanizing flat steel should be lead to the deep well pump, ultraviolet sterilizer from the indoor earth-termination , and exposed to the floor 500mm,and due to the equipment has not yet been tendered, there may be adjustment, the site should be adjusted according to the actual situation.

5、The earthing line should be installed with UPVC protection tube when it through the wall and floor.

6、The outside air conditioning machineAll and kinds of metal components indoor (metal doors, Windows, stair handrails, Steel plate, metal tank and the metal ladder etc.) shall be welded with the indoor earth-termination system or the main earth-termination system by using -25x4 hot galvanizing flat steel.

7、Metal door/window/ frame should be connected with each other by using the copper braided wire .

8、If the connection point of the copper strand and galvanized flat steel is in the soil,it is necessary to wrap asphalt on copper strand and galvanized flat steel to avoid corrosion,within 2m of the connection point.

Reference Drawings

Drwg. No.	Title

Revisions

Name	Date	Notes

巴基斯坦默蒂亚里-拉合尔±660kV直流输电工程

±660kV HVDC Project from Matiari to Lahore in Pakistan

NATIONAL TRANSMISSION & DESPATCH COMPANY (NTDC) LIMITED PAKISTAN

CONTRACTOR 国家电网 STATE GRID 中国电力技术装备有限公司 CHINA ELECTRIC POWER EQUIPMENT AND TECHNOLOGY CO.,LTD.

SUBCONTRACTOR East China Electric Power Design Institute Co.,Ltd.

拉合尔±660kV换流站

±660kV Lahore Converter Station

设计阶段 PHASE: 施工图 Detail Design

MLHVDC-LCS-ECI-DD-EC-0509-005A

	姓名	日期
设计 Designed		2018.2.8
校核 Checked		2018.2.8
审核 Reviewed		2018.2.8
批准 Approved		2018.2.8
比例 Scale	1:100	图号 DWG NO.

屋顶防雷平面图

Roof lightning protection plan

接地平面图

Earthing plan

30-B003701S-D0509-005

版本 REV. A

594X841

电气材料表
Electrical material list

图例 legend	设备名称 Equipment name	型号及规格 Model and specification	数量 quantity
	RC管 RC conduit	φ100	20m
	PC管 PC conduit	φ80	6m
	PC管 PC conduit	φ50	6m
	RC管 RC conduit	φ50	30m
	电线 Wire	BV-4*2.5+E2.5	20m
	电线 Wire	BV-2*2.5+E2.5	10m
	电线 Wire	N-BV-3*2.5+E2.5	10m
	PC管 PC conduit	φ20	30m
	RC管 RC conduit	φ20	10m
	SPD1		1
	SPD2		0
	断路器 Circuit breaker	GSH204-C25 300mA 0.3s YO	1
		S202-C20	0
		S201-C10	5
		S202-C10	0
		GSH204-D16/30mA/0.1S	2
		GSH204-D10/30mA/0.1S	2
	热镀锌圆钢 the hot dip galvanized round steel	ø12/ø8	25m/10m
	镀锌扁钢 the hot-dip galvanized flat steel	50x6	60m
	镀锌扁钢 the hot-dip galvanized flat steel	25x4	15m
	断接测试卡盒 The breaking test box		2
	螺栓 bolts		8
LEB	LEB端子板 Local Equipotential Bonding		0
	接地端子盒 earth terminal box		1
●	放热焊点 Exothermic Welding point	扁钢与接地线焊接点 Welding point of flat steel and the earth-termination system	13
	铜编织线 Braided copper wire	10mm²	10m
	UPVC保护管 UPVC protection tub		12m

图例 legend	设备名称 Equipment name	型号及规格 Model and specification	数量 quantity
	照明配电箱 lighting distribution box		1
	照明配电箱 lighting distribution box		0
	动力配电箱 Power distribution box		0
	深井泵控制箱(厂家供) Deep well pump control box (provided by manufacturer)	高*宽*深(Height * width * depth):650*480*200	1
	出口指示灯(防水型) exit sign lighting (waterproof type)	光源LED 3W(自带蓄电池) light source:LED 3w(Built-in battery)	1
	块板灯 Boards lamp 防水 waterproofing	70W 光源采用金卤灯 70W,The light source uses the metal halide lamp.	1
E	块板灯 Boards lamp 防水,备用照明 waterproofing,Standby lighting	70W 光源采用金卤灯 70W,The light source uses the metal halide lamp.	1
	吸顶灯(防水型) Suction lamp (waterproof type)	1*18W	1
	二,三极单相防溅组合插座(安全型) The diode triode single phase anti-splash combinated socket (safety type)	250V,10A	2
S,F	风机接线盒(防水型) Fan terminal box(waterproof type)	380V 10A	1
	应急灯(防水型) emergency lamp(waterproof type)	2*23W(自带蓄电池) 2*23W(Built-in battery)	1
	单联单控开关(IP54安全型) single connection planet single control switch(IP54 safety type)	250V,10A	3
	双联单控开关(IP54安全型) two connection planet single control switch(IP54 safety type)	250V,10A	0
LEB	LEB端子板 Local Equipotential Bonding		1
MEB	MEB总等电位端子板 Main Equipotential Bonding		1
	排气扇 Exhaust fan		0

注:
note:

1、本建筑物空调插座采用国标，公共区域插座国标和巴方标准每房间各安装一半原则实施，最终实施方案以业主及监理要求为准。

1、In this building,the air conditioning socket adopts Chinese standard;the electrical sockets in the public areas and each room according to the implementation principle that one half adopt Chinese standard and anothet half adopt Pakistani standard ,and the final implementation plan should be subject to the requirements of the owner and the supervisor.

2、开列材料均由乙方提供

2、All the materials shall be provided by party B

3、此材料表设备具体数量统计仅供参考。

3、The quantity of equipment in this material table is for reference only.

4、本换流站东西两侧的深井泵房电气材料表分别参照此图。

4、The electrical material list of the Deep well on both west and east sides of the this converter station is referenced in this list respectively.

Reference Drawings

Drwg. No.	Title

Revisions

	Name	Date	Notes

巴基斯坦默蒂亚里—拉合尔±660kV直流输电工程
±660kV HVDC Project from Matiari to Lahore in Pakistan

NATIONAL TRANSMISSION & DESPATCH COMPANY (NTDC) LIMITED PAKISTAN

CONTRACTOR 国家电网 STATE GRID 中国电力技术装备有限公司 CHINA ELECTRIC POWER EQUIPMENT AND TECHNOLOGY CO.,LTD.

SUBCONTRACTOR East China Electric Power Design Institute Co.,Ltd.

拉合尔±660kV换流站
±660kV Lahore Converter Station

设计阶段 PHASE: 施工图 Detail Design

M L H V D C - L C S - E C I - D D - E C - 0 5 0 9 - 0 0 6 A

	姓名	日期
设计 Designed		2018.2.8
校核 Checked		2018.2.8
审核 Reviewed		2018.2.8
批准 Approved		2018.2.8

材料表
Material list

比例 Scale: 1:100 | 图号 DWG NO.: 30-B003701S-D0509-006 | 版本 REV.: A

594X841